TALON Sliding Door Latches

DOOR THICKNESS RANGE:

20.5 – 38mm (13/16" – 1 1/2")

The Talon sliding-door lock is designed for aluminum extrusions, wood, or fiberglass doors. It offers:

- All Marine-grade materials for superior corrosion resistance
- Positive-grip latch mechanism keeps doors closed under even extreme conditions

Available Options:

Locking:

Keylocking and non-keylocking versions.
Non-keylocking features an exterior lock override.

Finish:

A variety of finish options includes Anodized Aluminum, Anodized Black Aluminum, Chrome and Brass.

Top Stop:

Optional stop holds doors at any open position.
High-seas Handle optional.

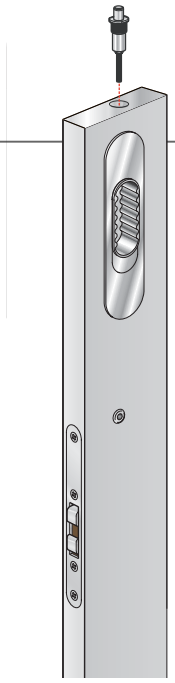

Top stop (Optional)

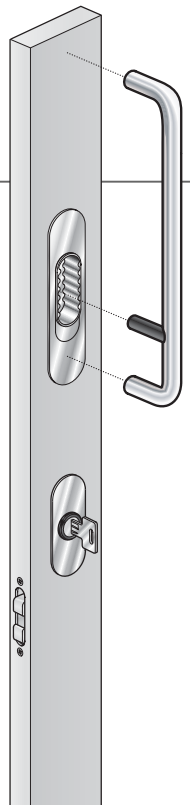

Chrome Talon
Key locking

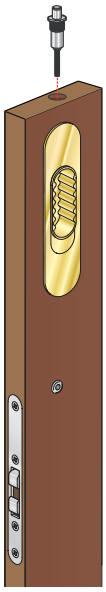

Talon without Key Locking

High - Seas Handle (optional)

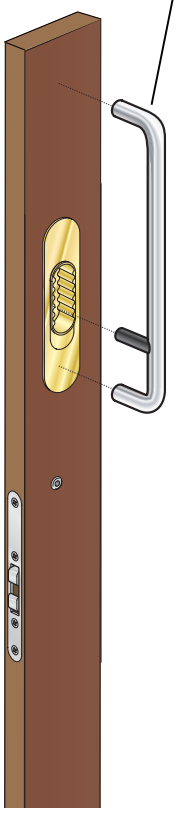

Diamond Brass Talon

TALON PART NUMBERS				
Without Key locking (egress opening from outside)	Door thickness range			
	20.5 - 23 mm (13/16 - 29/32")	**22.5 - 27 mm (7/8 - 1 1/16")**	**26.5 - 34.5 mm (1 1/16 - 1 3/8")**	**28.5 - 38 mm (1 1/8 - 1 1/2")**
Anodized aluminium	MM-01-100-60	MM-01-101-60	MM-01-102-60	MM-01-103-60
Anodized black aluminium	MM-01-100-50	MM-01-101-50	MM-01-102-50	MM-01-103-50
Chrome	MM-01-100-10	MM-01-101-10	MM-01-102-10	MM-01-103-10
Diamond brass	MM-01-100-40	MM-01-101-40	MM-01-102-40	MM-01-103-40
Key locking				
Anodized aluminium	MM-01-110-60	MM-01-111-60	MM-01-112-60	MM-01-113-60
Anodized black aluminium	MM-01-110-50	MM-01-111-50	MM-01-112-50	MM-01-113-50
Chrome	MM-01-110-10	MM-01-111-10	MM-01-112-10	MM-01-113-10
Diamond brass	MM-01-110-40	MM-01-111-40	MM-01-112-40	MM-01-113-40

TALON without Key locking Sliding Door Latches

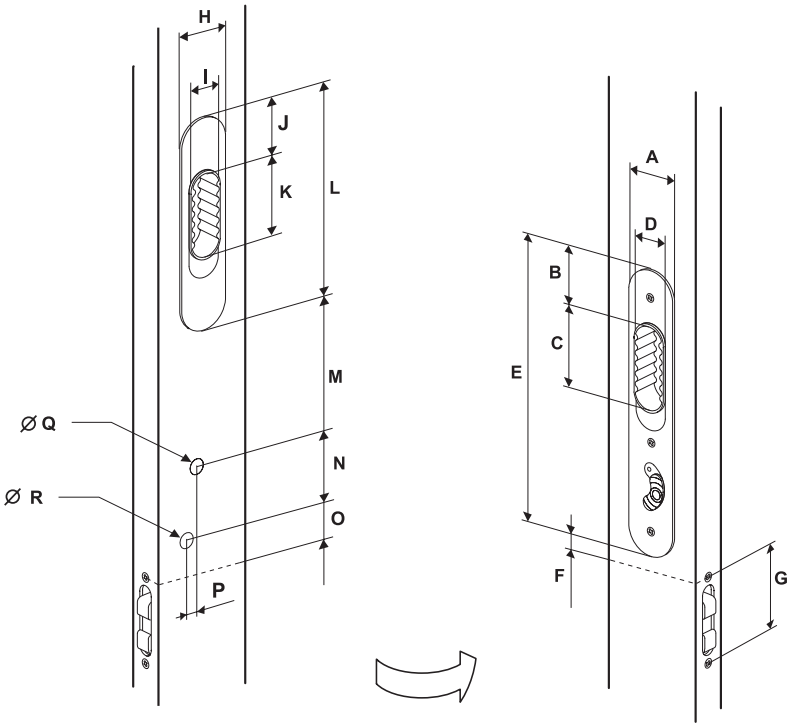

	Imperial		Metric
	Nominal	Decimal	
A	1 13/32	1.41	36
B	1 1/2	1.49	38
C	2 3/16	2.18	55.5
D	3/4	.75	19
E	7 9/16	7.56	192
F	3/8	.374	9.5
G	2 7/32	2.224	56.5
H	1 13/32	1.41	36
I	3/4	.75	19
J	1 1/2	1.49	38
K	2 3/16	2.18	55.5
L	5 5/8	5.63	143
M	3 7/16	3.445	87.5
N	15/16	.945	24
O	1 1/32	1.024	26
P	9/32	.276	7
Q	1/4	.250	6.35
R	1/4	.250	6.35

Panel Preparation

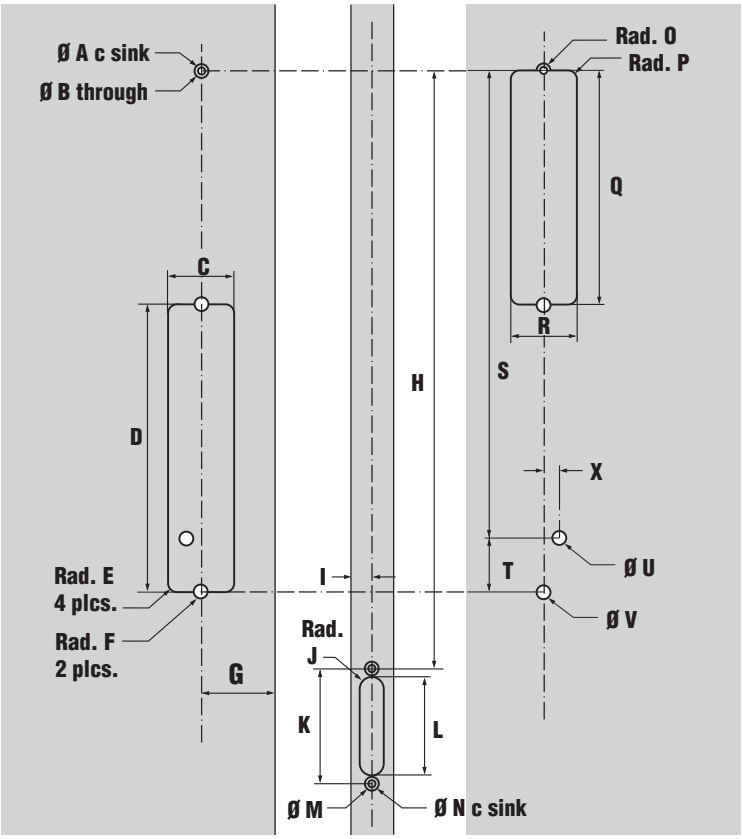

U = (Option for egress opening)

		Imperial		Metric
		Nominal	Decimal	
A		5/16	.311	7.9
B		5/32	.156	4
C		1 3/16	1.187	30.2
D		6 5/32	6.142	156
E		5/32	.156	4
F		5/32	.156	4
G	min.	53/64	.827	21
	max.	1 33/64	1.516	38.5
H		11 7/16	11.437	290.5
I	min.	11/32	.354	9
	max.	19/32	.591	15
J		7/32	.211	5.5
K		2 7/32	2.205	56
L	min.	1 3/4	1.77	45
	max.	1 13/16	1.81	46
M		5/32	.156	4
N		5/16	.311	7.9
O		5/32	.156	4
P		5/32	.156	4
Q		4 7/32	4.213	107
R		1 3/16	1.187	30.2
S		9 25/64	9.39	238.5
T		31/32	.965	24.5
U		1/4	.25	6.35
V		1/4	.25	6.35
X		9/32	.276	7

MOBELLA® BY SOUTHCO MARINE

TALON Key locking Sliding Door Latches

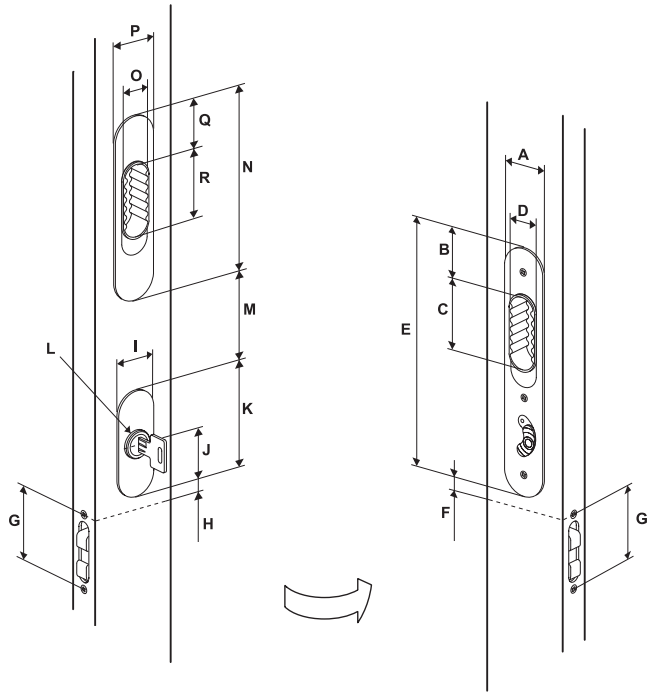

	Imperial		Metric
	Nominal	Decimal	
A	1 13/32	1.41	36
B	1 1/2	1.49	38
C	2 3/16	2.18	55.5
D	3/4	.75	19
E	7 9/16	7.56	192
F	3/8	.374	9.5
G	2 7/32	2.224	56.5
H	3/8	.374	9.5
I	1 19/64	1.299	33
J	1 41/64	1.634	41.5
K	3 7/32	3.228	82
L	7/8	.87	22
M	2 55/64	2.85	72.5
N	5 5/8	5.63	143
O	3/4	.75	19
P	1 13/32	1.41	36
Q	1 1/2	1.49	38
R	2 3/16	2.18	55.5

Panel Preparation

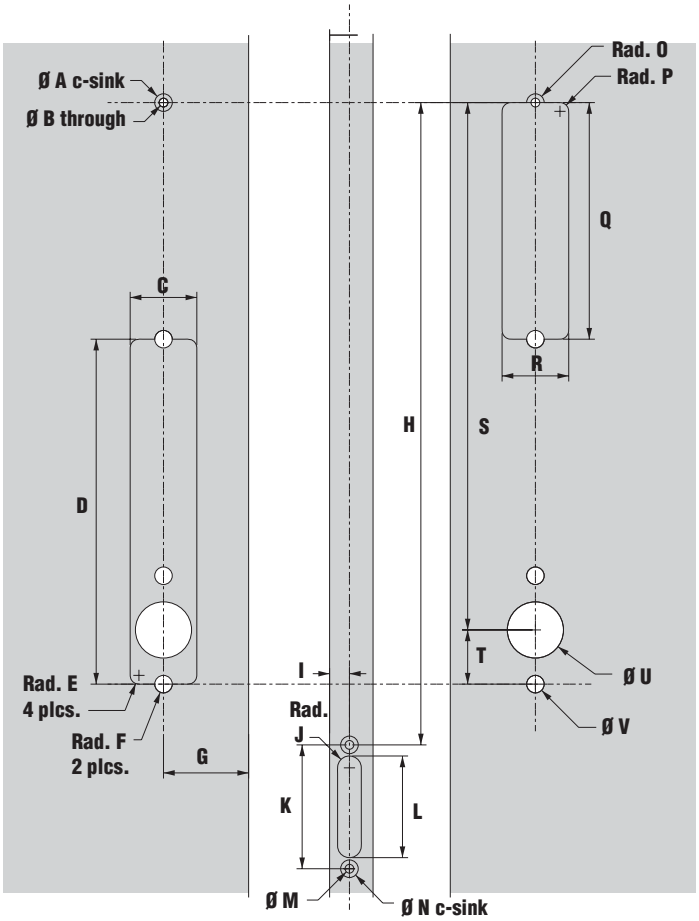

		Imperial		Metric
		Nominal	Decimal	
A		5/16	.311	7.9
B		5/32	.156	4
C		1 3/16	1.187	30.2
D		6 5/32	6.142	156
E		5/32	.156	4
F		5/32	.156	4
G	min.	53/64	.827	21
	max	1 33/64	1.516	38.5
H		11 7/16	11.437	290.5
I	min.	11/32	.354	9
	max	19/32	.591	15
J		7/32	.211	5.5
K		2 7/32	2.205	56
L	min.	1 3/4	1.77	45
	max	11 3/16	1.81	46
M		5/32	.156	4
N		5/16	.311	7.9
O		5/32	.156	4
P		5/32	.156	4
Q		4 7/32	4.213	107
R		1 3/16	1.187	30.2
S		9 25/64	9.39	238.5
T		31/32	.965	24.5
U		1	1	25.4
V		5/16	.314	8

TALON Installation Sliding Door Latches

without Key locking

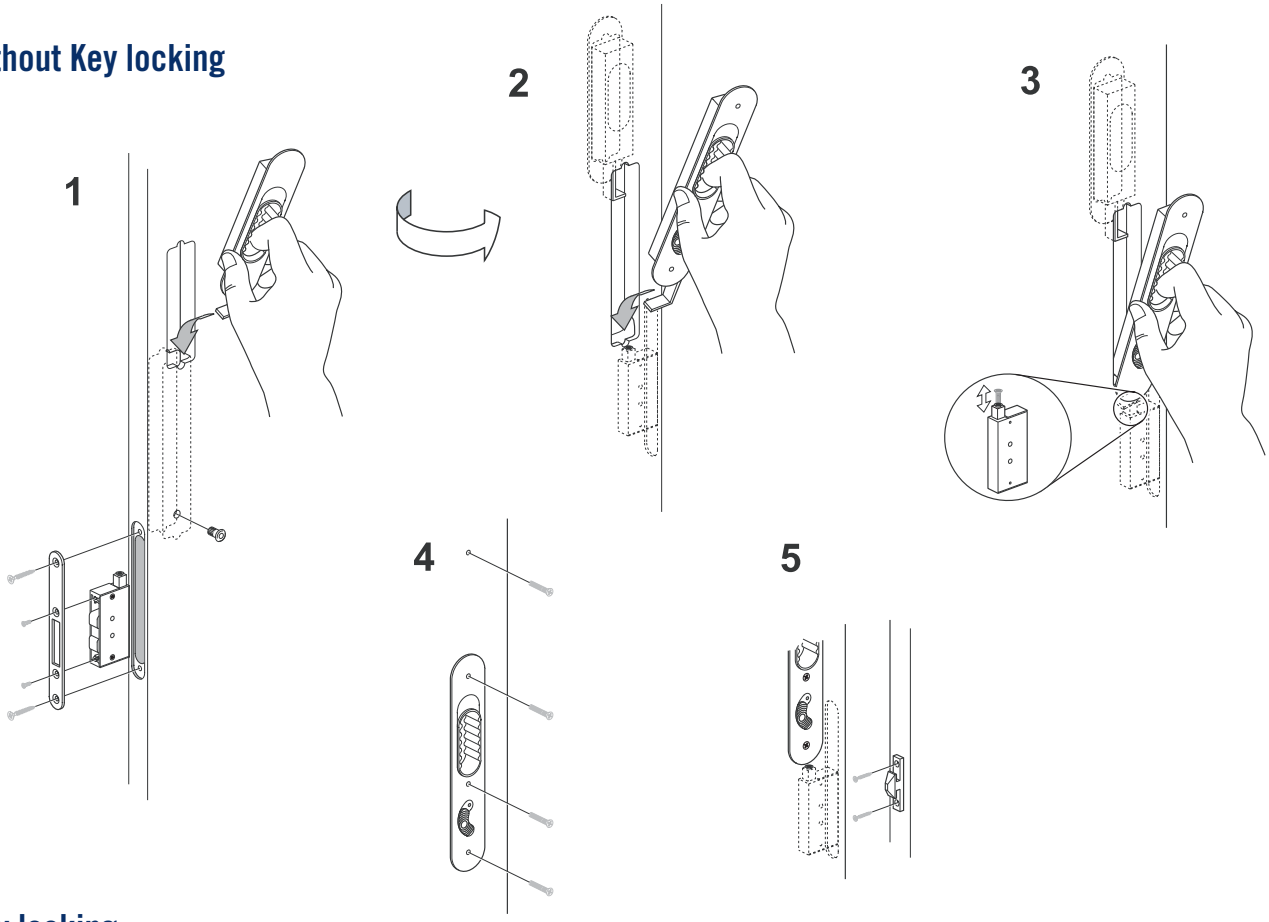

Key locking

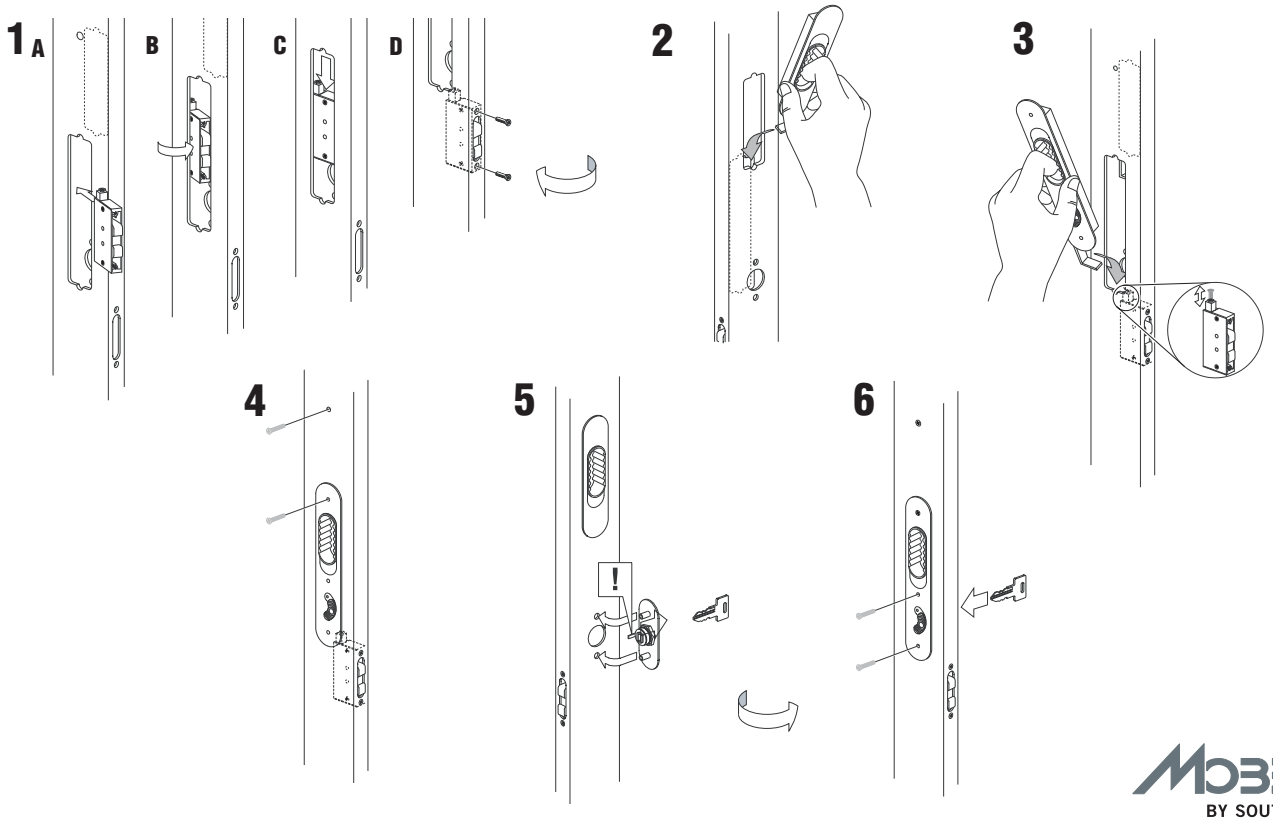

MOBELLA® BY SOUTHCO MARINE